WBS 3.1 - Trigger

Wesley H. Smith, *U. Wisconsin*

CMS Trigger Project Manager

DOE/NSF Review

June 5, 2002

This talk is available on:

http://hep.wisc.edu/wsmith/cms/Trig_Lehman_Plen02.pdf

Outline

- Overview of Calorimeter Trigger
- Calorimeter Trigger Status & Plans
- Overview of Muon Trigger
- Muon Trigger Status & Plans
- Cost and Schedule Performance
- Concerns
- Summary and Conclusions

Trigger & DAQ Systems

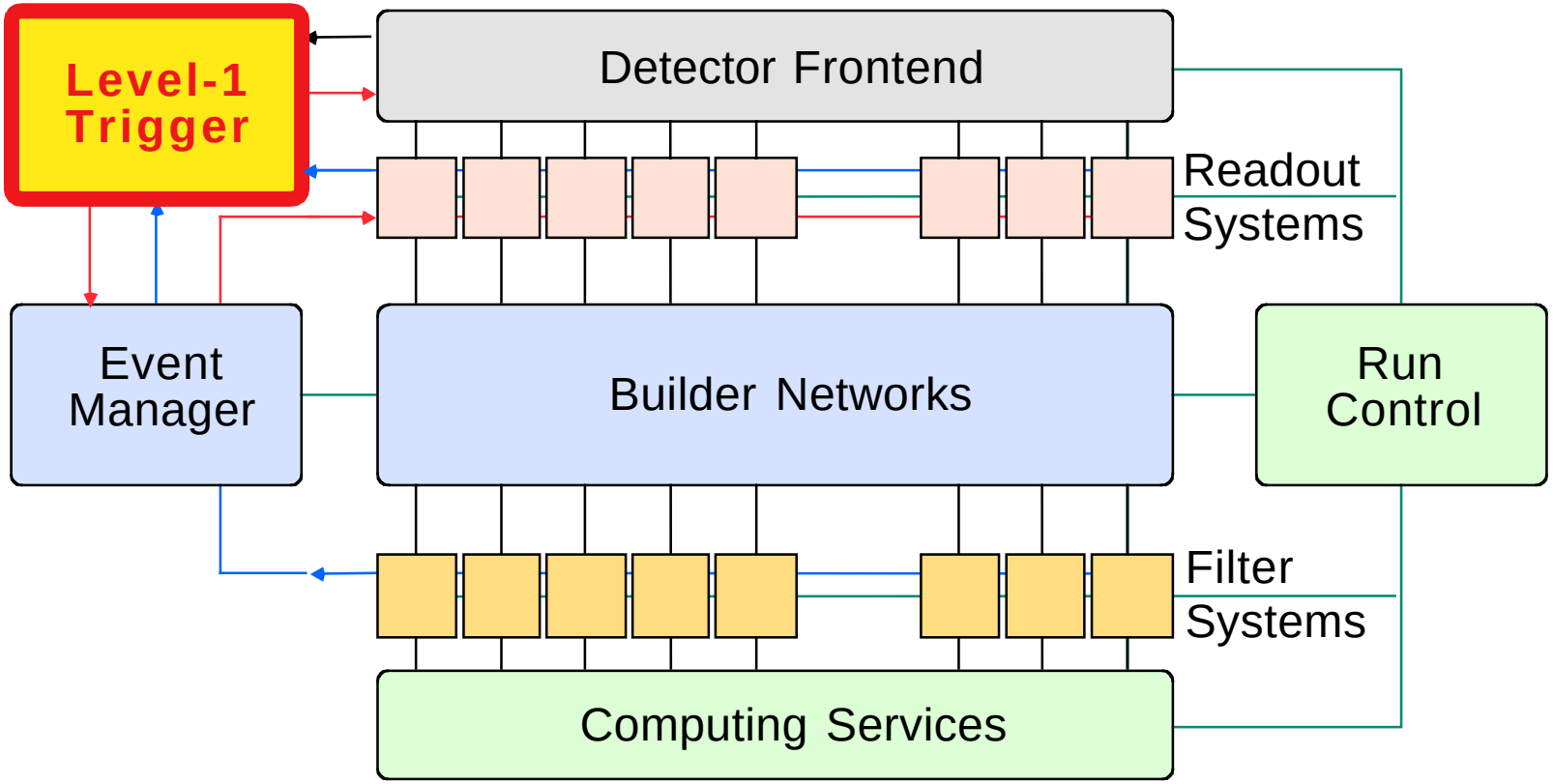

Level-1 Trigger Requirements:

- **Input: 10^9 events/sec at 40 MHz at full $\mathcal{L} = 10^{34}$**
- **Output: 100 kHz (50 kHz for initial running)**
- **Latency: 3 μsec for collection, decision, propagation**

L1 Trigger Hardware Overview

US CMS Trigger (this talk)

US CMS fully responsible

US CMS partially responsible

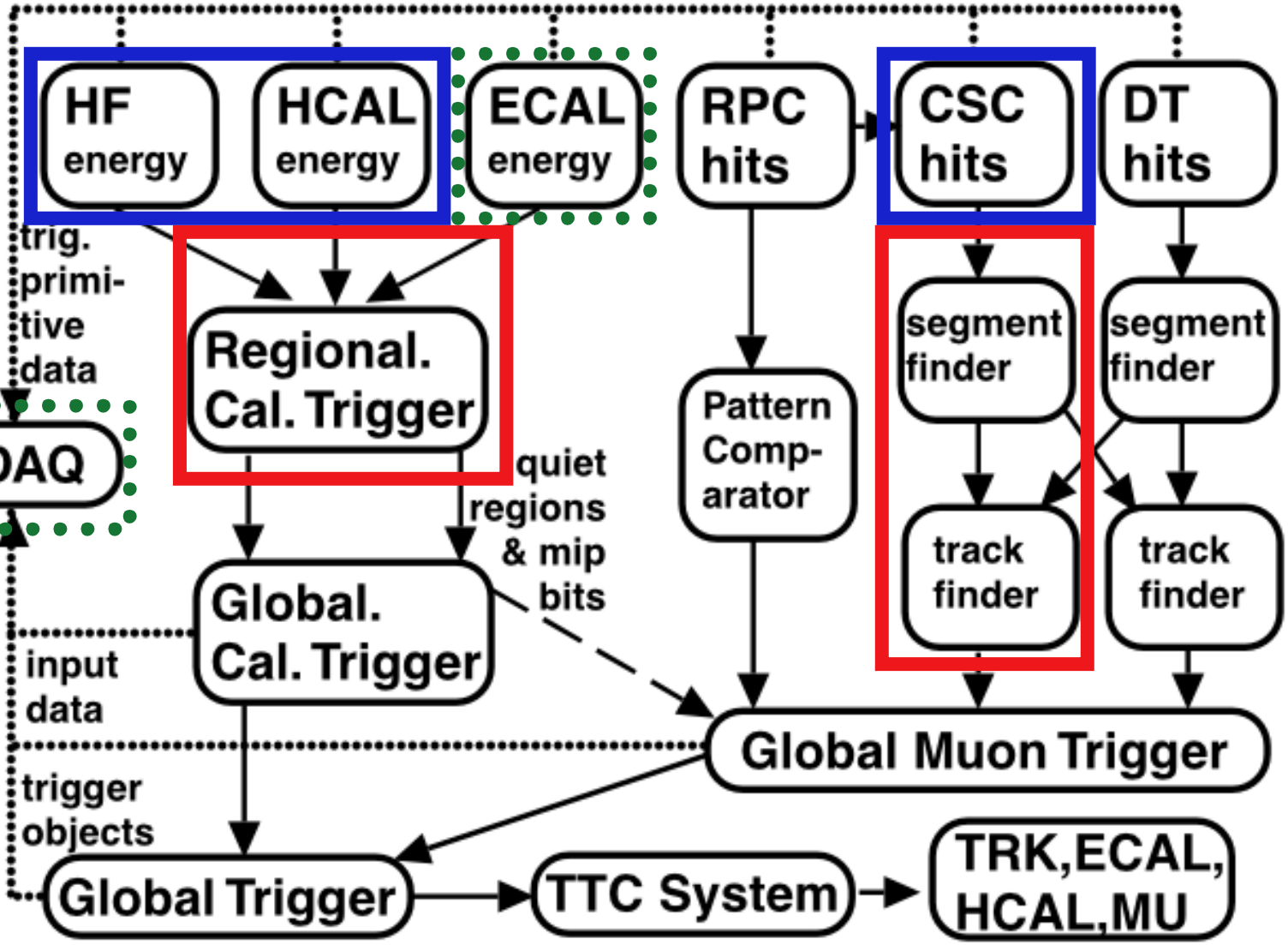

Calorimeter Trig.Overview

(all located in underground counting room)

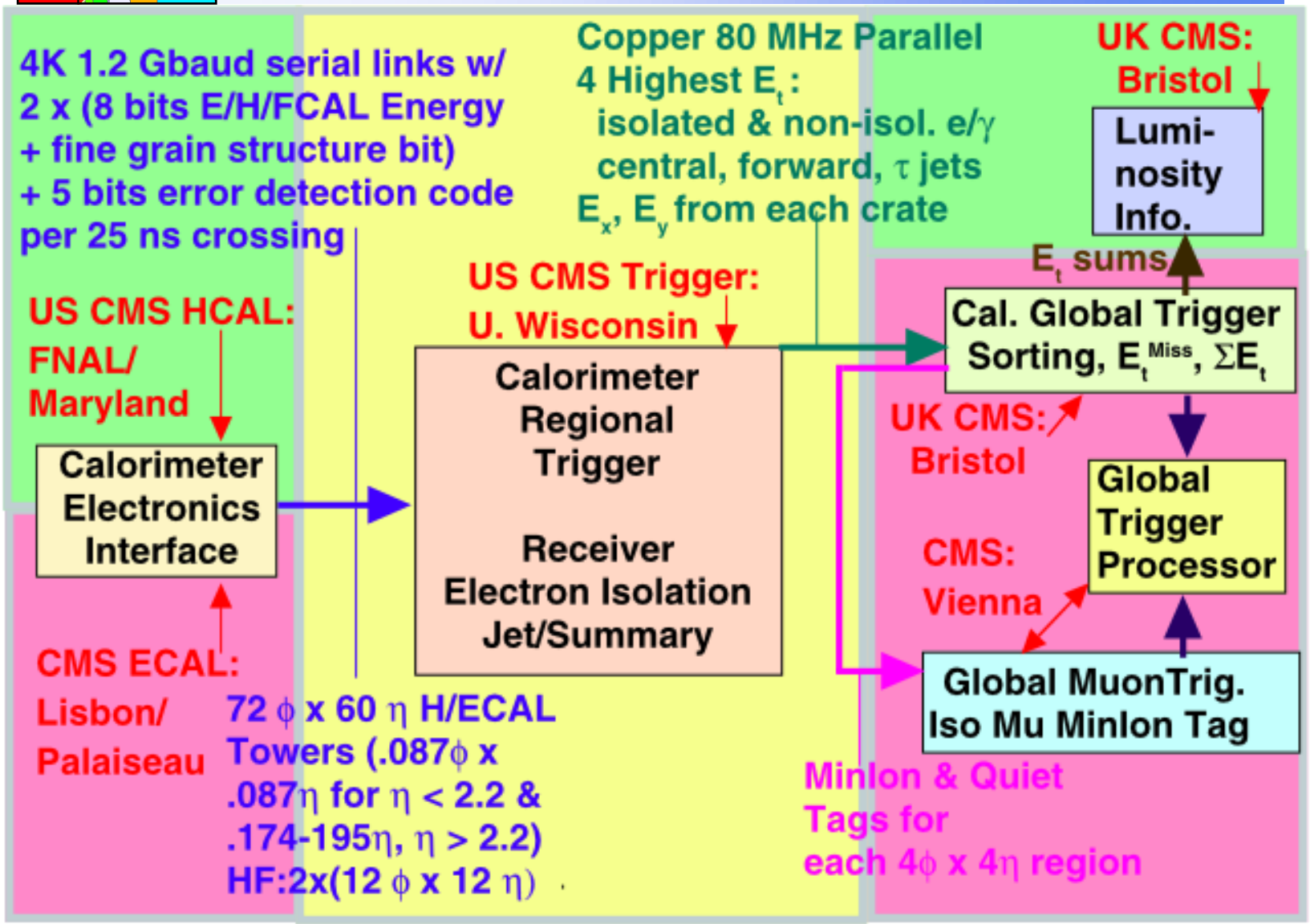

Calorimeter Trigger Crate

Data from calorimeter FE on Cu links @ 1.2 Gbaud

- ***Into 126* rear Receiver Cards***
- ***Prototype tested w/ ASICs***

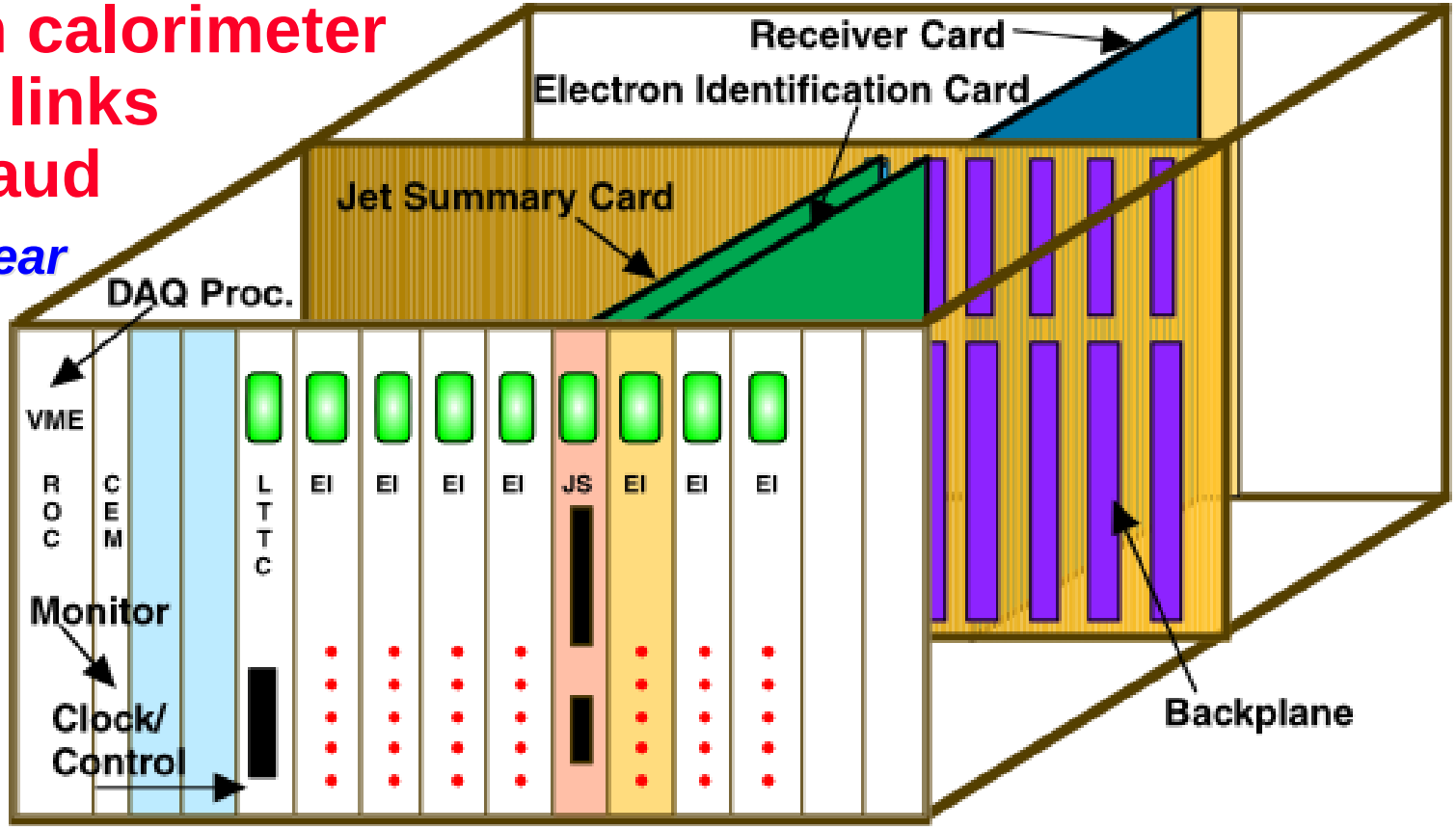

160 MHz point to point backplane (proto. tstd.)

- **18 Clock&Control (proto. tstd.), 126 Electron ID (proto. tstd.), 18 Jet/Summary Cards -- all cards operate @ 160 MHz**
- **Use 5 Custom Gate-Array 160 MHz GaAs Vitesse Digital ASICs**
  - Phase, Adder, Boundary Scan, Electron Isolation, Sort (manufactured)

*Spares not included**

1st Generation Calorimeter Trigger Prototype Tests (U. Wisconsin)

Successful Prototyping Program

- Crate & 160 MHz Backplane tested ✔
- Clock Card tested ✔
- Receiver Card tested (w/ Adder ASIC) ✔
- Adder ASIC tested & production finished ✔
- Electron Isolation Card tested ✔
- 4 x 1.2 Gbaud Copper Serial Link system:
  - Successfully trans-mits data at 4 Gbit/s over 20 m cable ✔

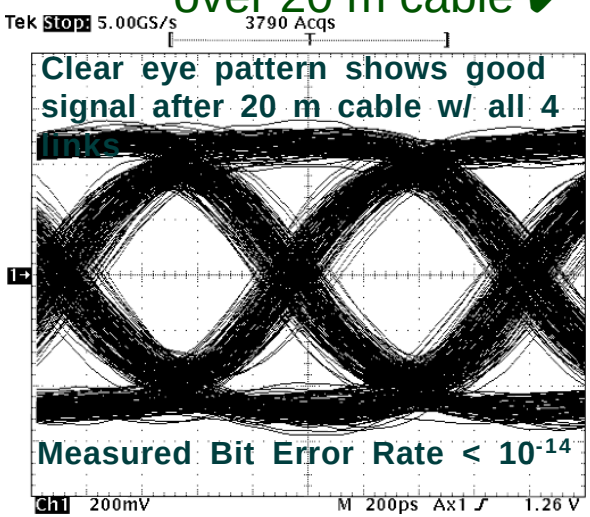

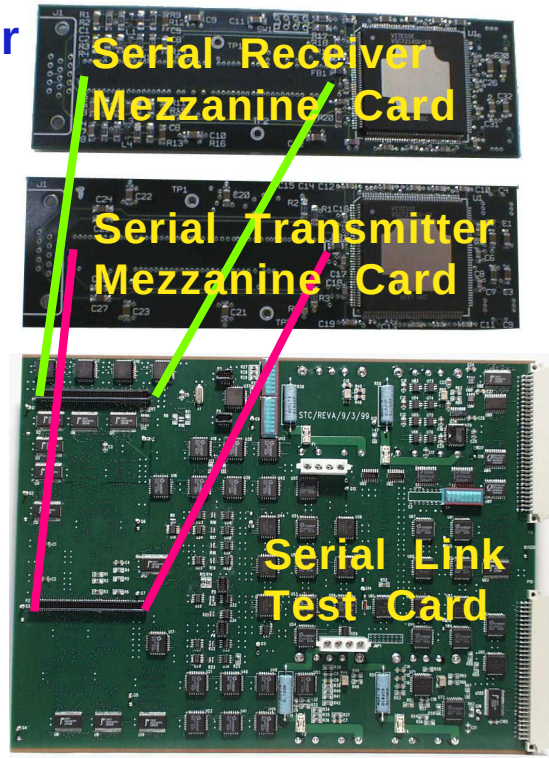

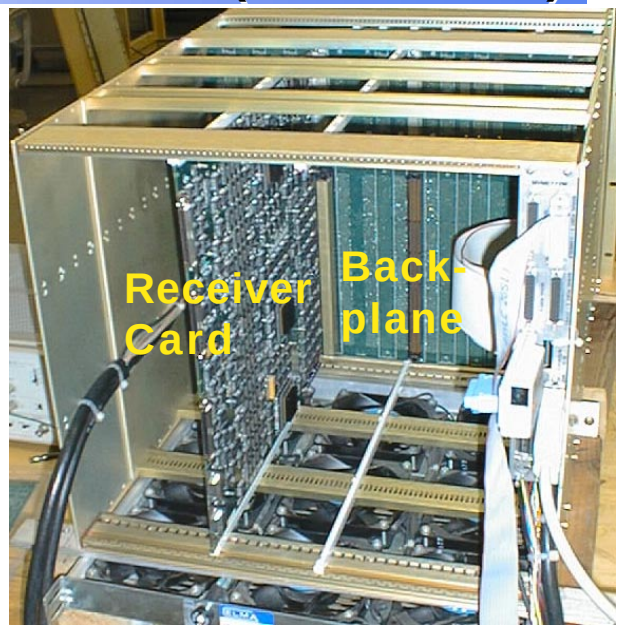

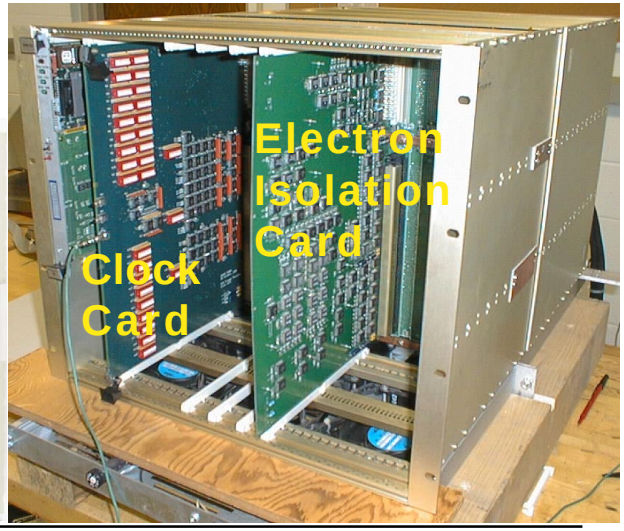

Cal. Trig. 2nd Gen. Prototypes (U. Wisconsin)

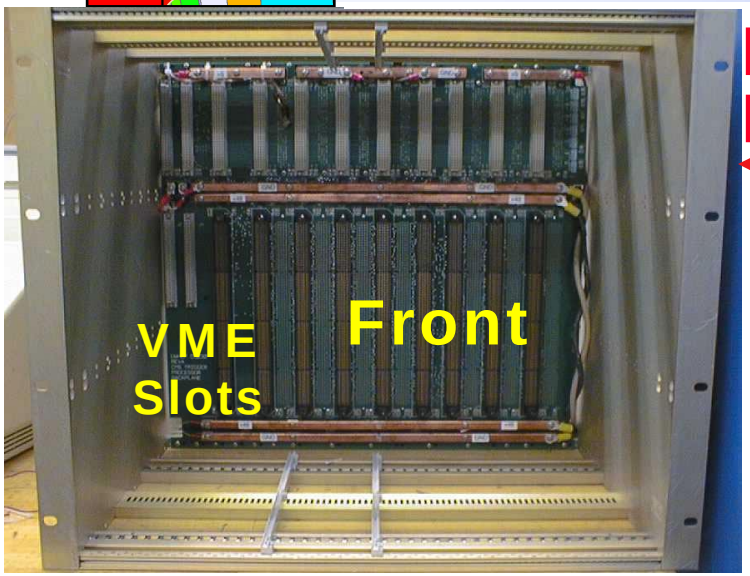

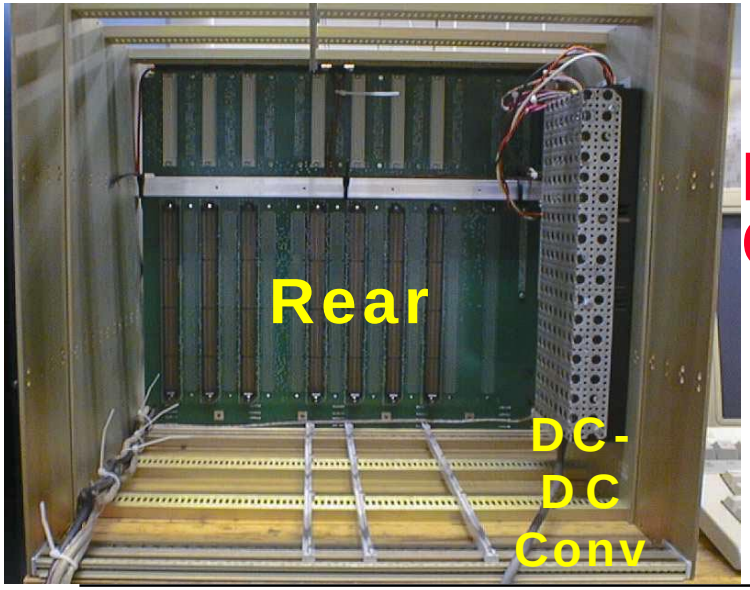

New High-Speed Backplane

- **160 MHz with 0.4 Tbit/sec dataflow**
  - Mostly tested
- **Designed to incorporate algorithm changes**
  - New Non-Isolated Electron, Tau & Jet Triggers

New Clock & Control Card

- **Fans out 160 MHz clock & adjusts phases for all boards**
  - 50% tested

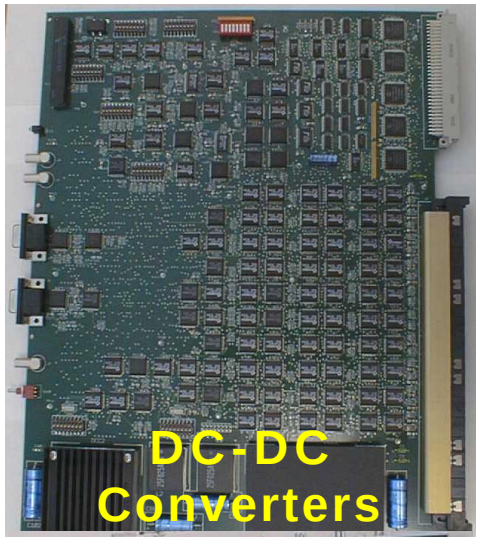

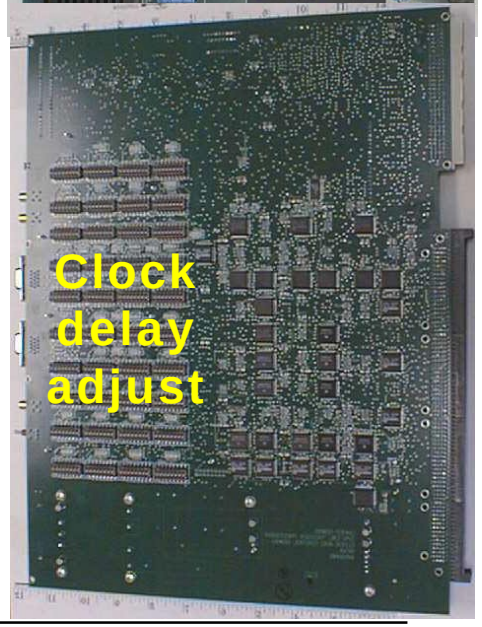

New Cal. Trig. 4 Gbaud Copper Link Cards & Tester (U. Wisconsin)

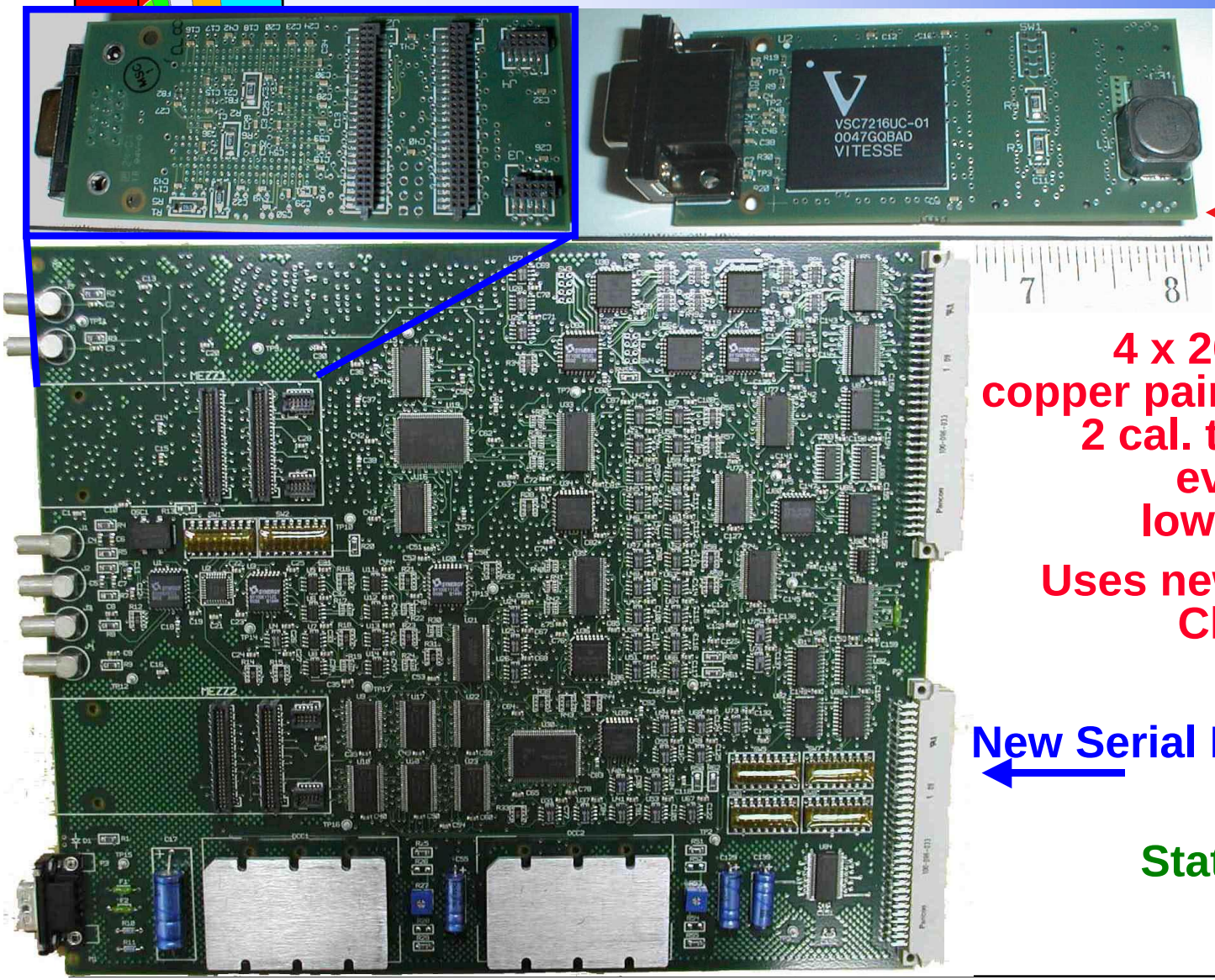

8 Compact Mezzanine Cards for each Receiver Card accept 4 x 20 m 1.2-Gbaud copper pairs transmitting 2 cal. tower energies every 25 ns with low cost & power.

Uses new Vitesse Link Chips (7216-01).

New Serial Link Test Card

Status: under test

New Calorimeter Trigger Receiver Card (U. Wisconsin)

Full featured final prototype board is in test - initial results are good.
Continue to test on-board ASICs & copper link mezzanine cards

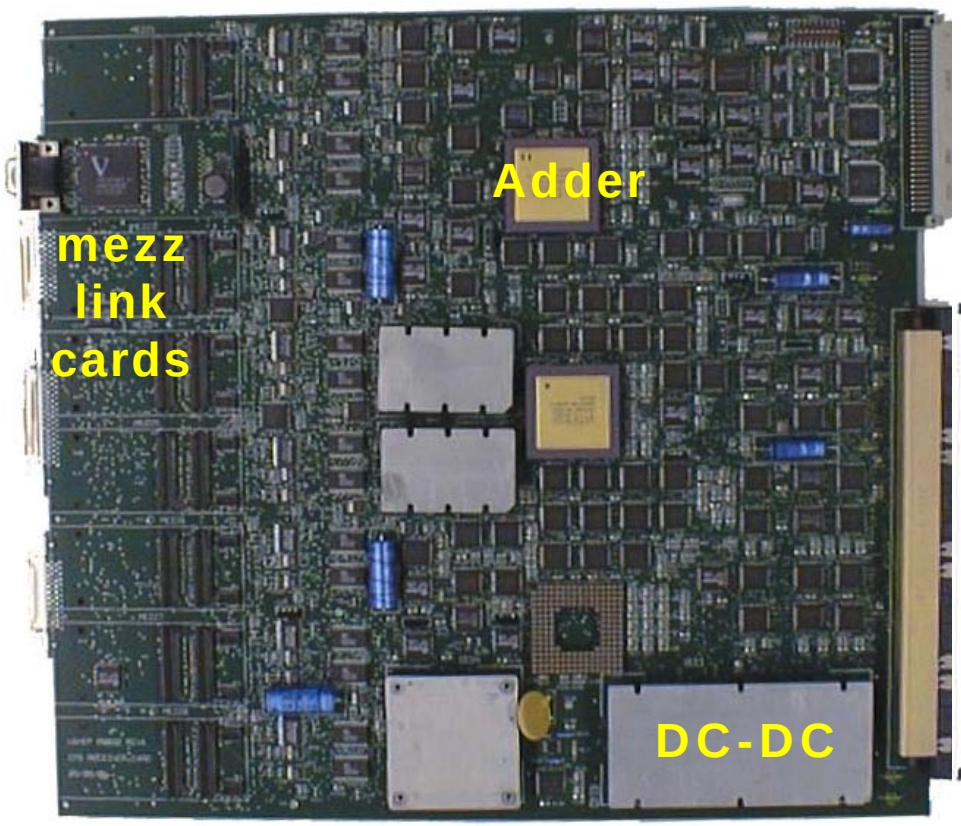

Top side with 1 of 8 mezzanine cards & 2 of 3 Adder ASICs

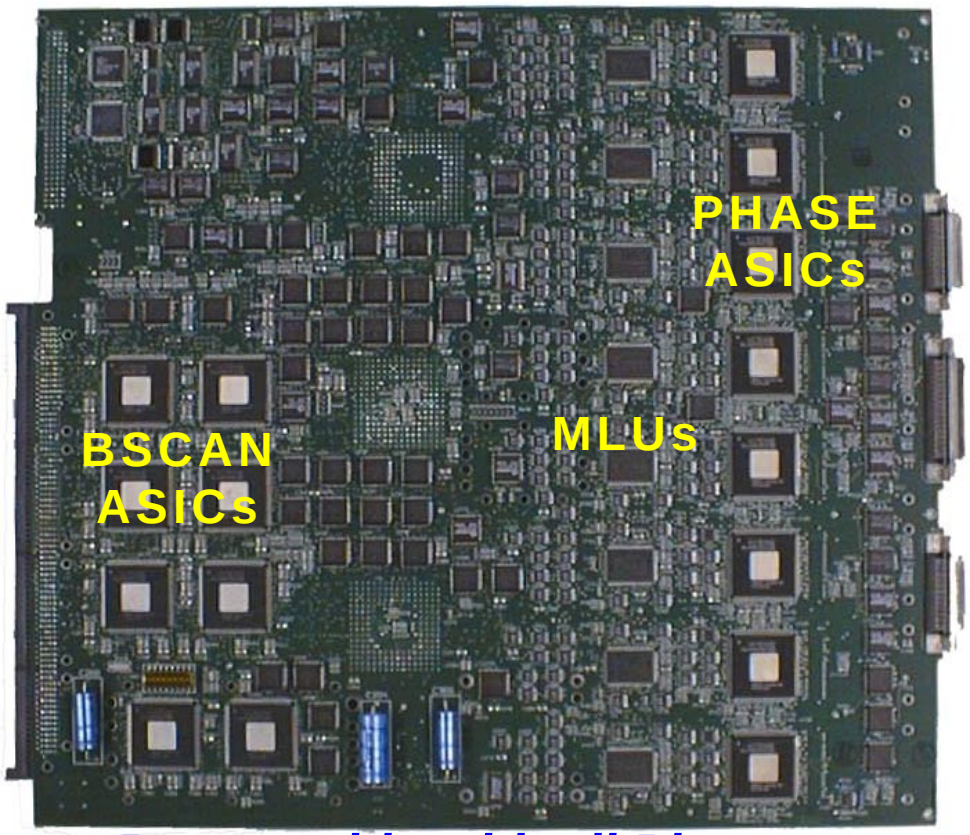

Bottom side with all Phase & Boundary Scan ASICs

Cal. Trig. New Electron Isolation & Jet/Summary Cards (Wisconsin)

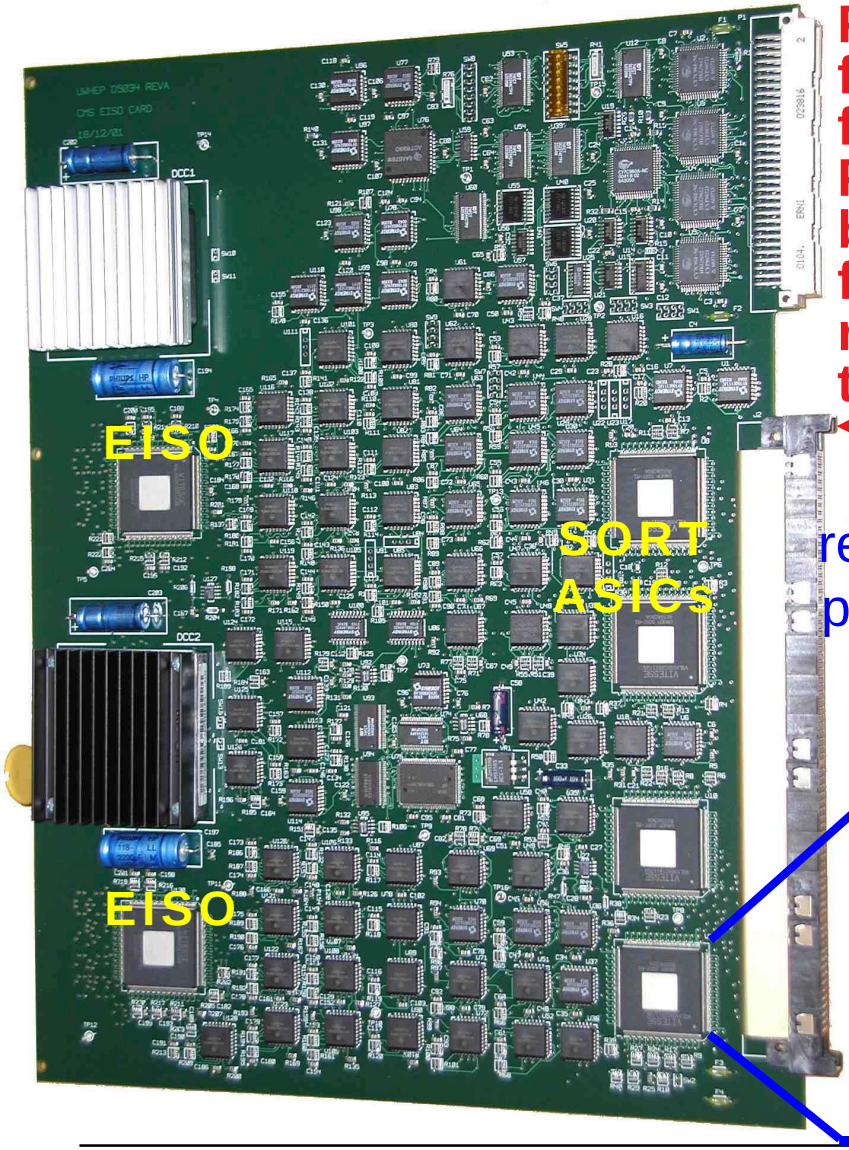

Full featured final E.I. Proto. board is finished & ready for testing.

JSC Proto. ready to build pending tests of other boards

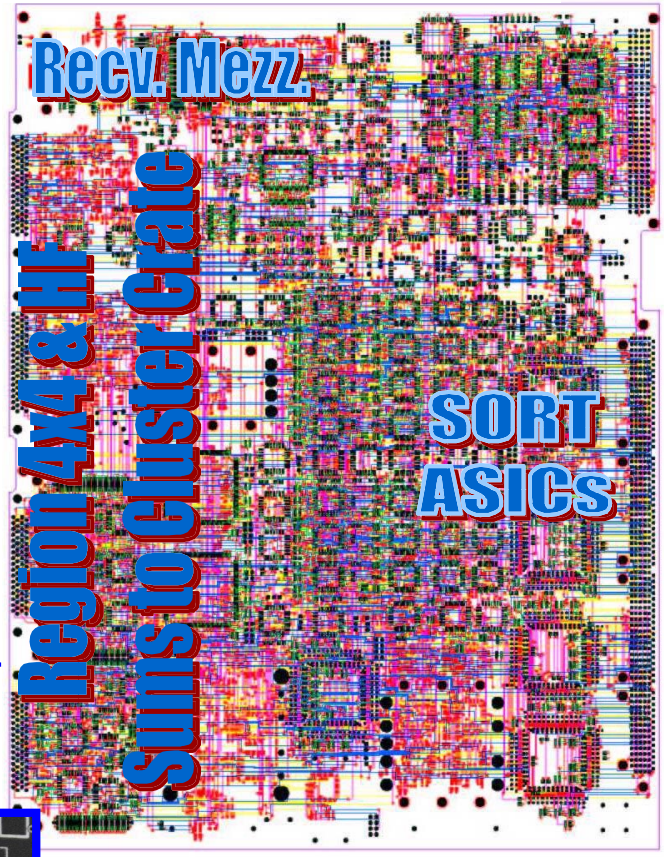

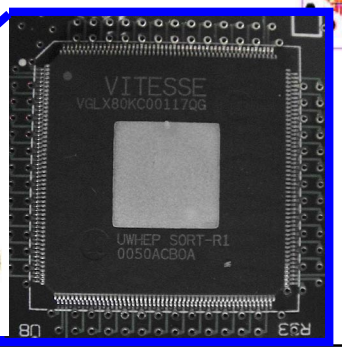

E.I. Proto will test Electron Isolation ASICs & Sort ASICs

Cal Trigger Status/Plans

Second generation prototype tests underway

- Crate, Backplane, Clock & Control, ASICs, Receiver Card & Electron Isolation Card done & under test
- Jet/Summary Card designed & laid out
- Serial Link Mezzanine Card Receiver, Transmitter &, Tester Card done & under test

Goals for 2002

- Complete of prototype tests, validate ASICs
- Integrate Serial Links w/ECAL,HCAL front-ends
- Prototype Jet/Summary card manufacture
  - Ready for manufacture -- waiting for other board tests
- Finalize Jet Cluster crate design

CSC Muon Trigger Overview

(red = trigger responsibility)

Muon Track-Finder Crate in underground counting room: Sector Receiver/Processor + Muon Sorter + Clock & Control Board

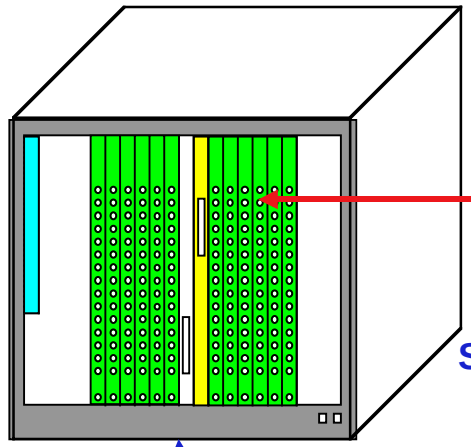

Muon Port Card

Trig Motherboard

Clock Control Board

Optical Link

DAQ Mother-board

Slow Control

Peripheral Crate on iron disk

1 of 5

1 of 5

Cathode Front-end Board

1 of 2

Anode Local Charged Track Board

1 of 24

LV Distribution Board

Anode Front-end Board

CSC

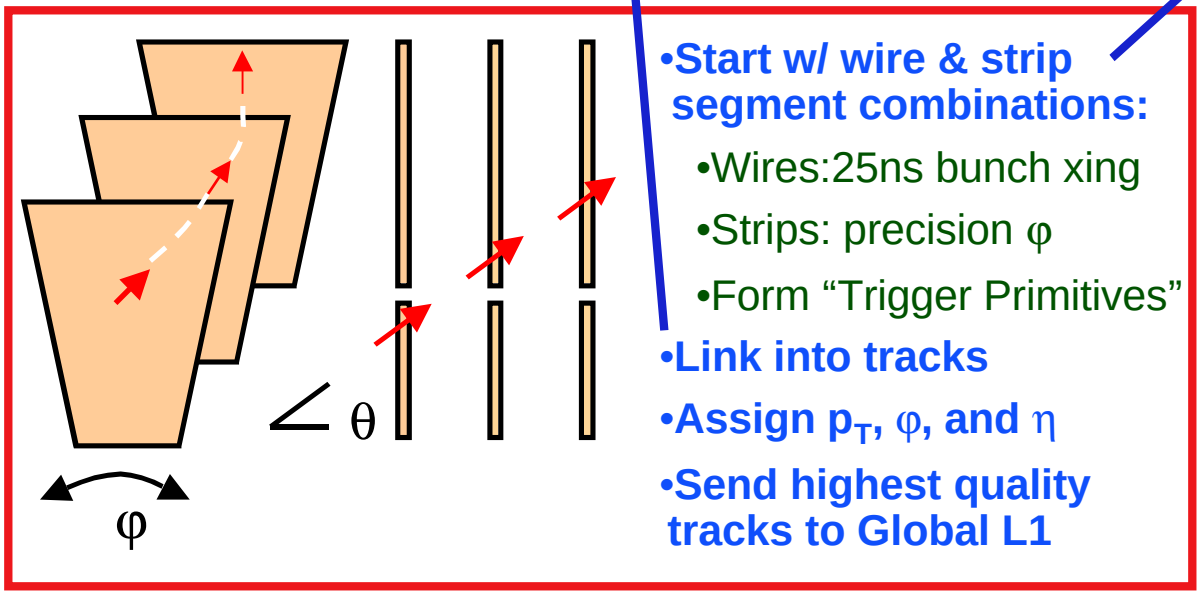

CSC Muon Trigger Scheme

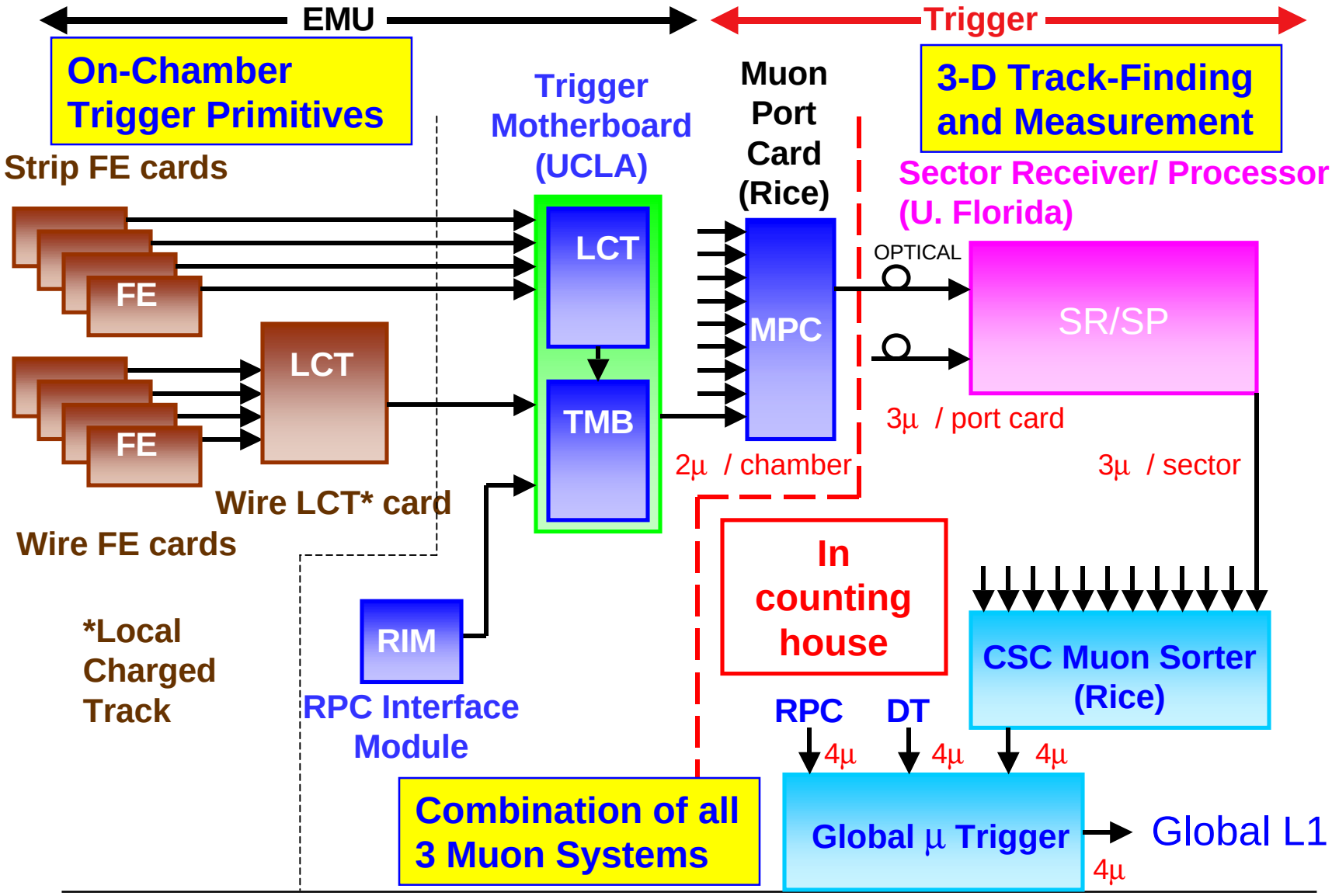

1st Muon Trigger Prototypes (Florida, Rice, UCLA)

Successful CSC Trigger Integration test

- Prototype Muon Port Card, Sector Receiver, Sector Processor, Clock Board, Backplane work & communicate -- Result in 2000

ORCA full simulation working

- Agreement/use with hardware test

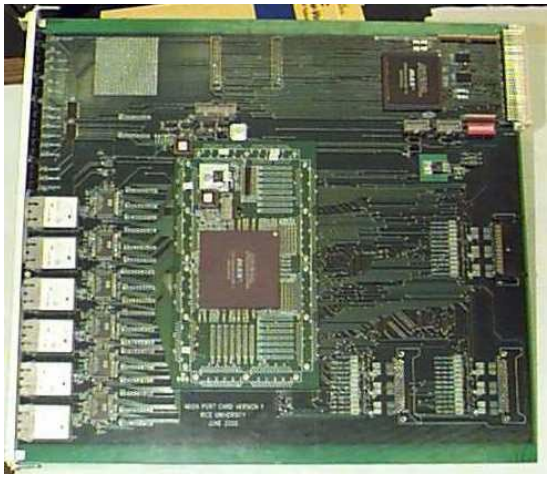

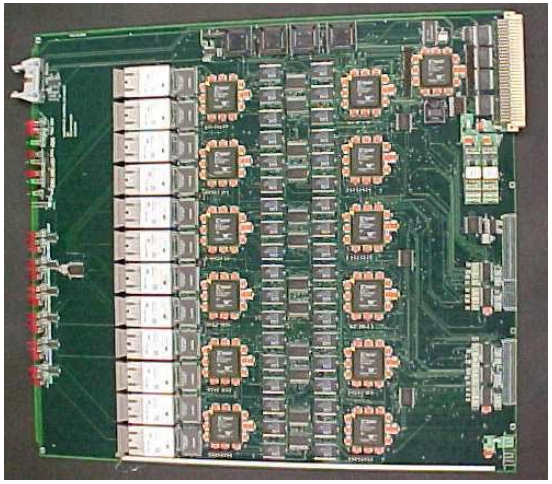

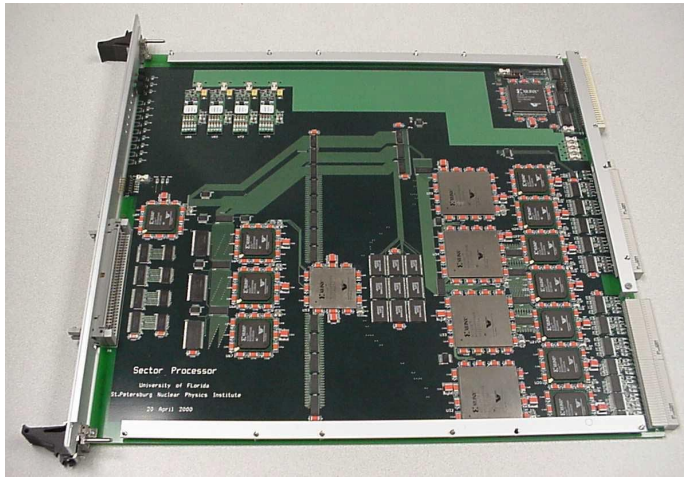

1st Track-Finder Crate Tests

Sector Processor (Florida)

Sector Receiver (UCLA)

Clock Control Board (Rice)

Muon Port Card (Rice)

Bit3 VME Interface

Custom Backplane (Florida)

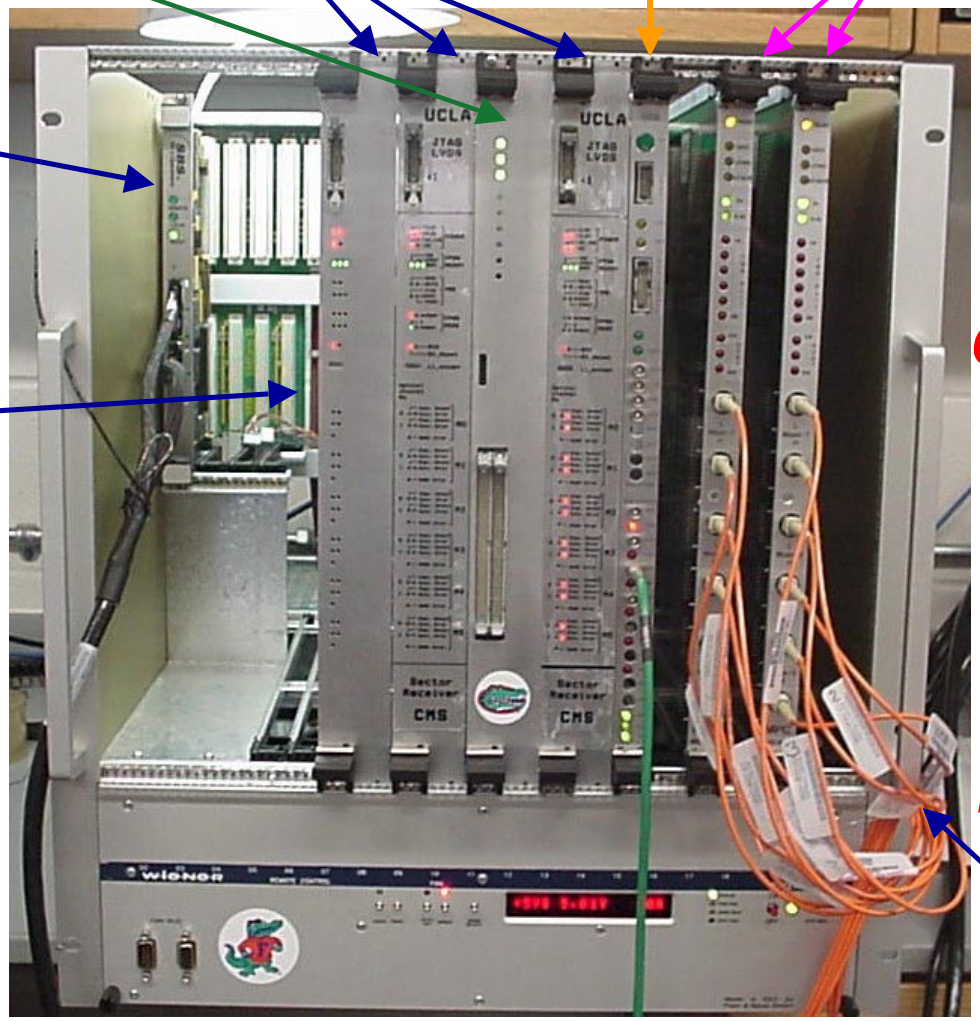

Prototype crate for original six crate design

Very successful, but overall CSC front end through trigger processing latency too high -- New design in 2001

100m optical fibers

New EMU Trigger Design: U. Florida Track-Finder

Single Track-Finder Crate Design with 1.6 Gbit/s optical links

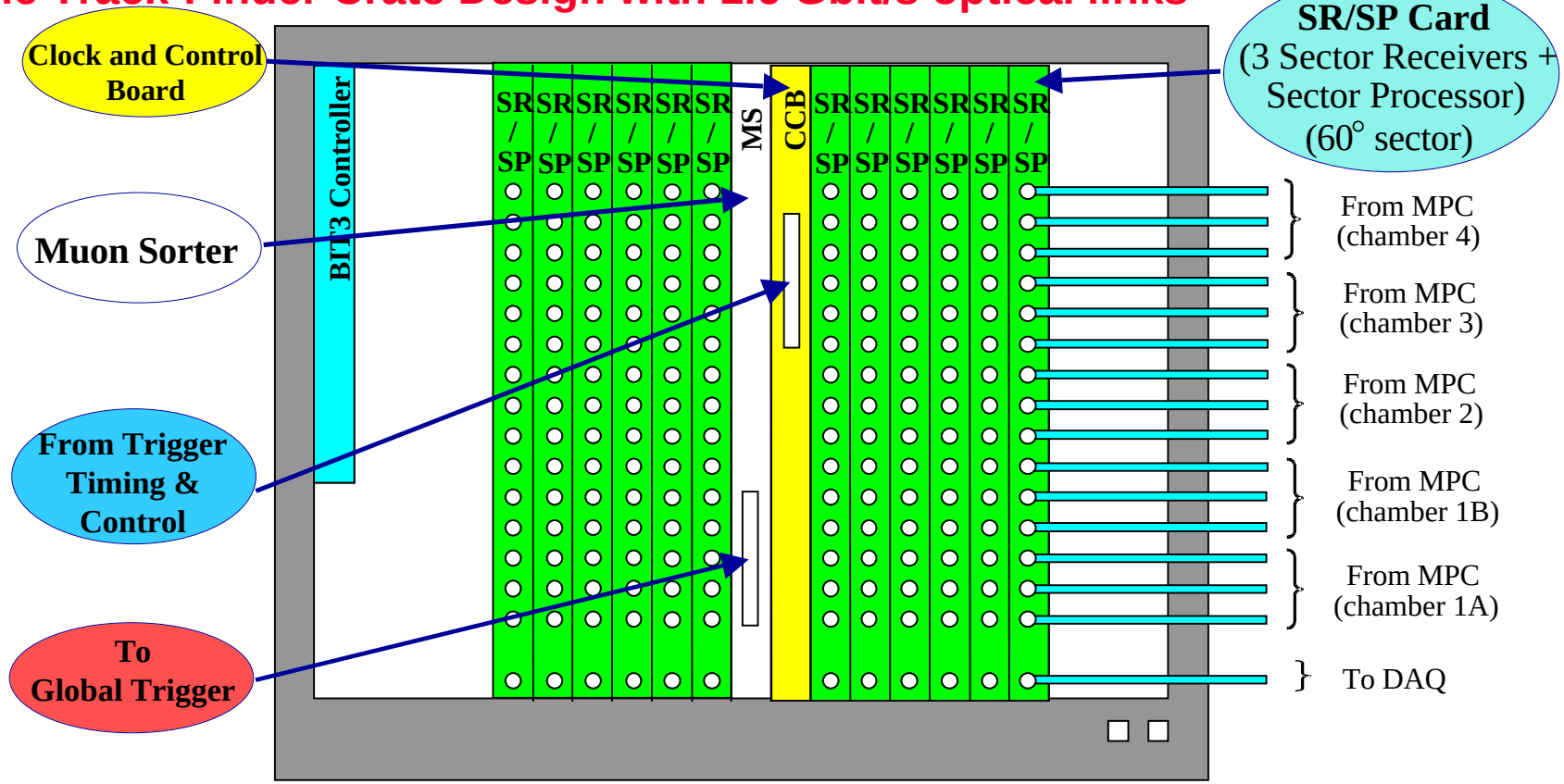

- **Reduces processing time from 525 ns (old design) to 175 ns**
  - Total Latency ~ 15 Bx (from input of SR/SP card to output of MS card)
- **Crate Power Consumption ~ 1000 W • 16 Optical connections per SR/SP card**
- **Custom Backplane for SR/SP ⇔ CCB and MS connection**

New Muon Port Card Design & Optical Link Tests (Rice)

New MPC Design uses new high speed links (TLK2501) to send one muon per optical fiber
(needed for new compact track-finder design)

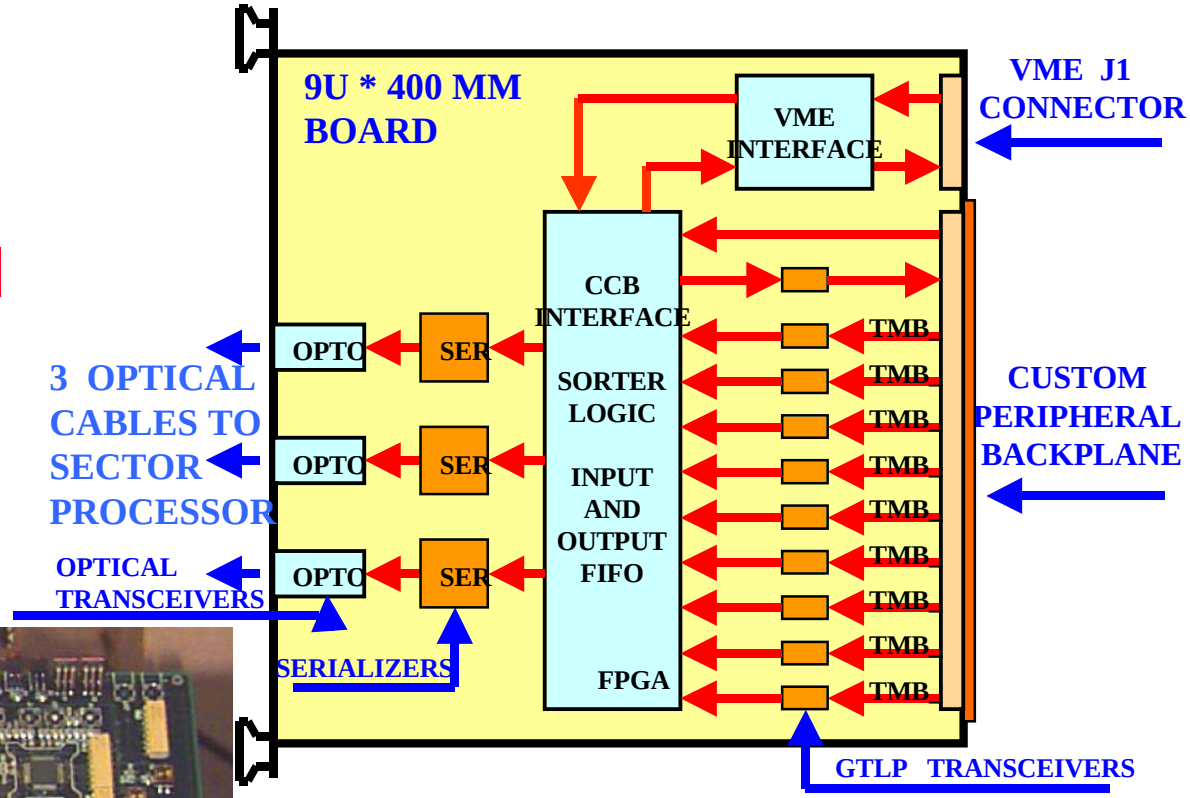

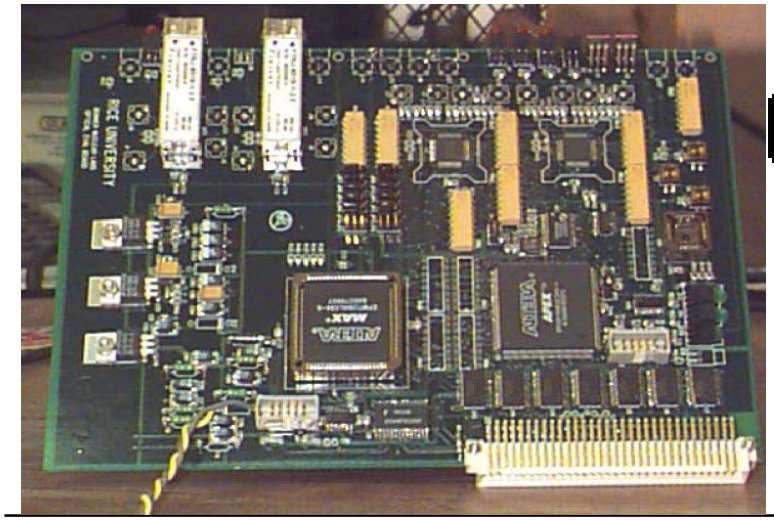

Optical Link Radiation Tests:
Three serializers: up to 270 kRad TID. No permanent damage or SEU
Two Finisar optical modules: No errors up to 70 kRad. Failed at 70kRad (well above ~10 kRad TID inner CSC dose for 10 years)

SR/SP 2002 Board Layout
(U. Florida)

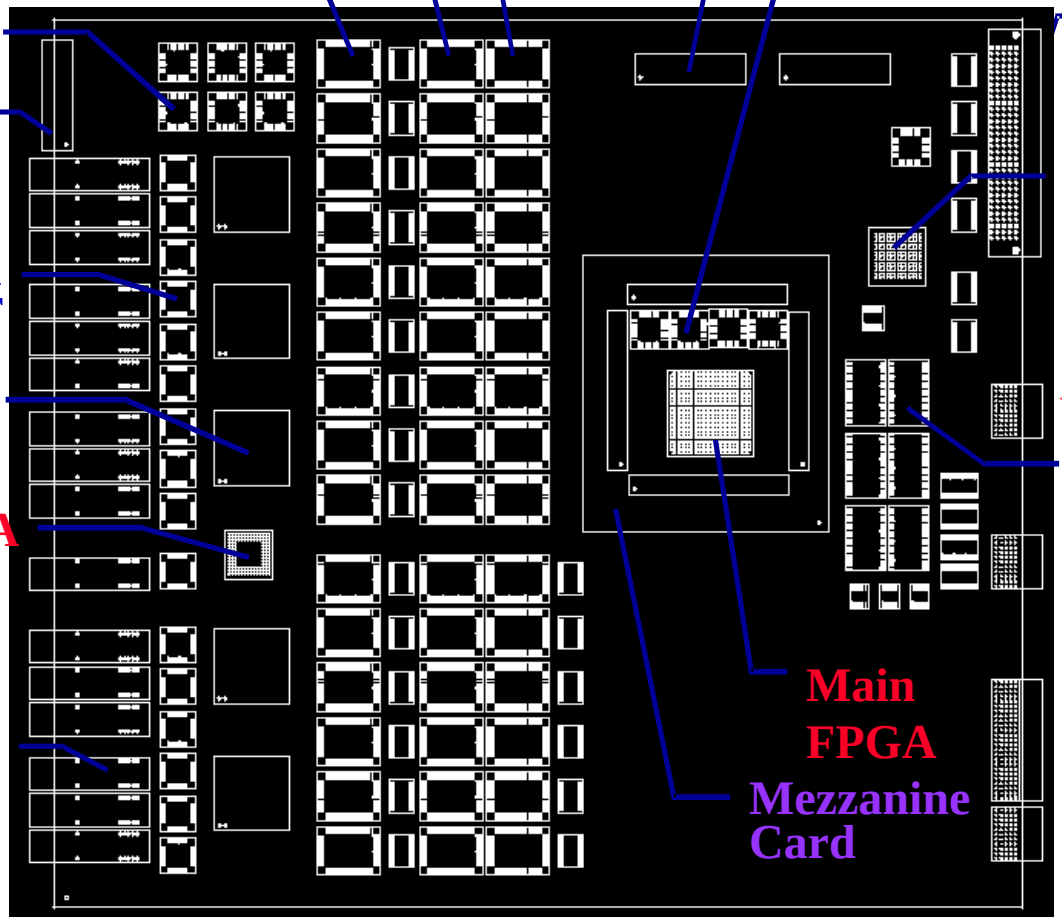

CSC Track Finder Backplane
(U. Florida)

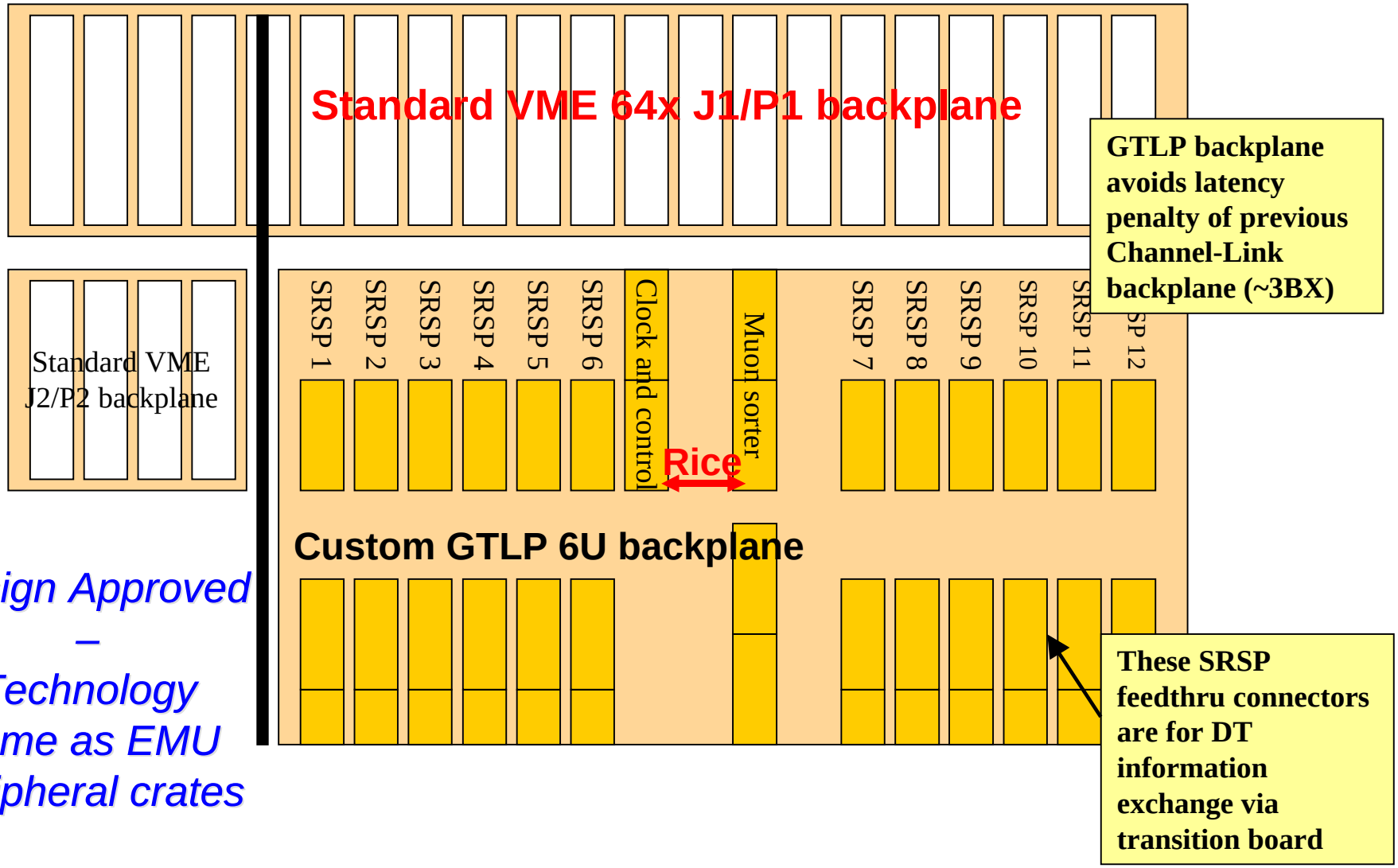

Design Approved – Technology same as EMU peripheral crates

New Muon Sorter Design (Rice)

Reduced to single board -- reduces latency, cost

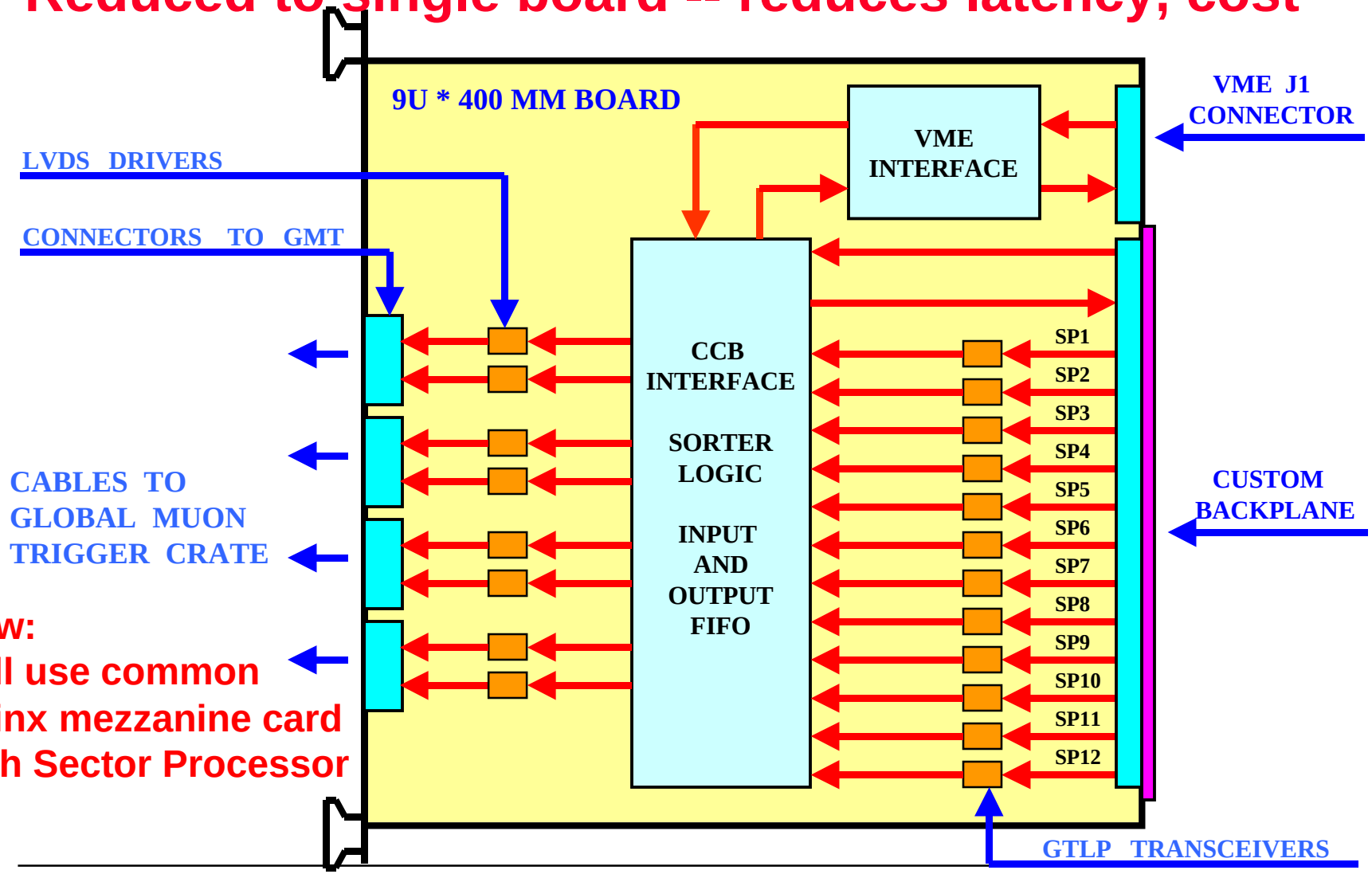

New:
Will use common Xilinx mezzanine card with Sector Processor

CSC Trigger Status/Plans

Prototype 1 tests now complete

Prototype 2 and production follow EMU components to optimize technology

MPC, SP, CCC modules, backplane* milestones:

- **Apr-02 Prototype 2 designs done ✔**
  - Freeze CSC-DT interface
  - Determine DAQ interface w/ EMU readout
- **Nov-02 Prototype 2 construction done**
- **Apr-03 Prototype 2 testing done (begin EMU integration)**
- **Sep-03 Final designs done**
- **Oct-04 Production done**
- **Apr-05 Installation done**

(*backplane schedule ~3 months ahead of above dates to provide platform for testing and integration)

Muon Sorter module: only 1, design by Jan-04

US Trigger FY02 Planning

Trigger SOWs FY02 -- $1.7M

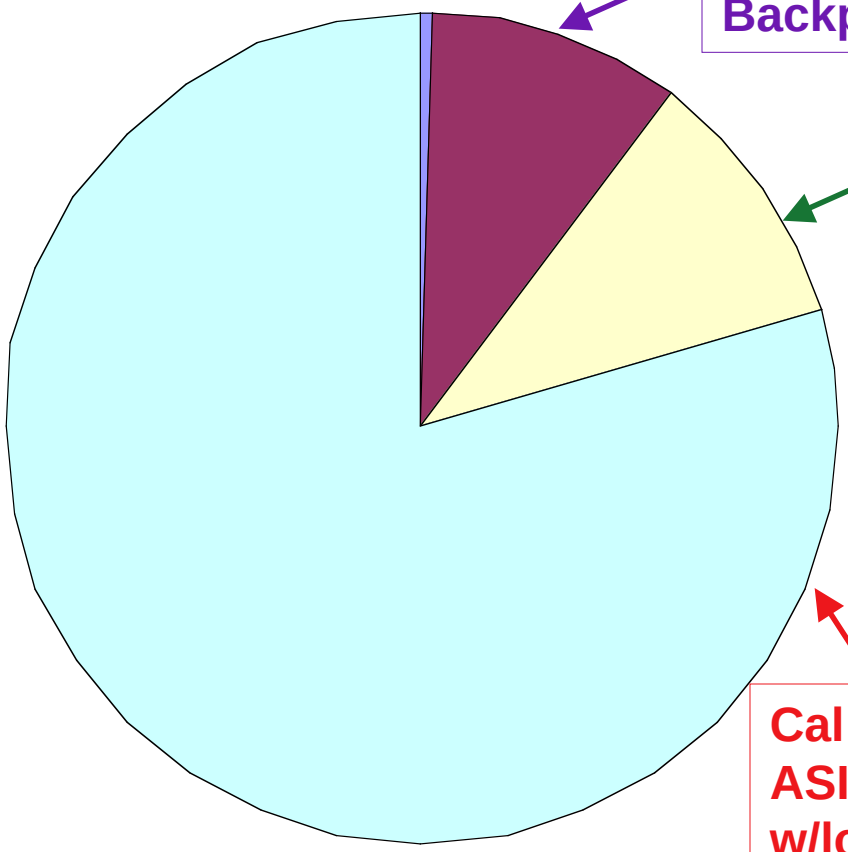

Muon Trigger Sector Receiver/Processor & Backplane Prototypes (Florida)

Muon Trigger Muon Port Card & Clock/Control Prototypes (Rice)

Cal Trigger Prototype Boards, Production ASICs & Validated Production Components w/long order time or obsolescence risk (Wisconsin)

Recent Trigger Milestone Performance (v31)

RCT Delays of 3-5 months:

- **Reorganized board schedule to accelerate Vitesse ASIC testing**
  - Delay JSC since not needed for ASIC tests
- **Success with 1st generation prototypes → make 2nd generation prototypes preproduction**
  - Longer design time delays testing
  - Saves time later in schedule

Milestone	v31 Base	Current Start	Variance
Trigger Subsystem (WBS 1.3.1)	**NA**	**Nov 30 '99**	**0 days**
Design of Final Sort ASIC	Nov 30 '99	Nov 30 '99	0 days
Review of Calorimeter Trigger Control and Reac	Nov 30 '99	Nov 30 '99	0 days
TK: SP Proto Design (Florida)	Nov 30 '99	Nov 30 '99	0 days
CSC: MPC Proto Delivery (Rice)	Jul 31 '00	Jul 31 '00	0 days
Review of Integration of Calorimeter Trigger Prc	Nov 30 '00	Nov 30 '00	0 days
Submit Trigger Technical Design Report (TDR)	Dec 31 '00	Dec 31 '00	0 days
RCT: CCC Proto Test Complete	Dec 31 '01	Jul 31 '02	148 days
Finish Trigger Final Prototype Design	Dec 31 '01	Dec 31 '01	0 days
~~GCT: System Design Complete~~ Not US	~~Dec 31 '01~~	~~Aug 31 '02~~	~~171 days~~
CSC: Bckpl Specified (DT Info)	Dec 31 '01	Dec 31 '01	0 days
Regional Cal. Trig. - RC Proto Test Complete	Feb 28 '02	Jul 31 '02	109 days
RCT: ASIC Proto Test Complete	Mar 31 '02	Jul 31 '02	87 days
RCT: Bckpl Proto Test Complete	Mar 31 '02	Jul 31 '02	87 days
RCT: JSC Proto Test Complete	Apr 30 '02	Sep 30 '02	109 days
RCT: Electron ID Proto Test Complete	Jun 30 '02	Jun 30 '02	0 days
Finish Trigger Final Prototypes	Jun 30 '02	Jun 30 '02	0 days
CSC: C&CB Proto Test Complete	Sep 30 '02	Sep 30 '02	0 days
RCT: CCC Prod Test Complete	Oct 31 '02	Oct 31 '02	0 days
Finish Trigger Final Prototype Test Complete	Dec 31 '02	Dec 31 '02	0 days
GCT: Integration Test Complete	Dec 31 '02	Dec 31 '02	0 days
CSC: SR/SP Proto Test Complete	Mar 31 '03	Mar 31 '03	0 days
CSC: MPC Proto Test Complete	Mar 31 '03	Mar 31 '03	0 days
RCT: RC Prod Test Complete	May 31 '03	May 31 '03	0 days
Finish Trigger Pre-Prod Design & Test	Jun 30 '03	Jun 30 '03	0 days

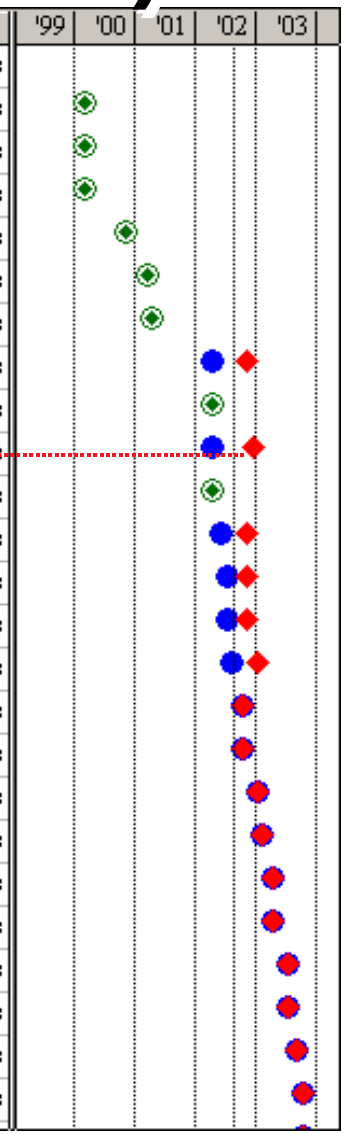

Completion &Transition to M&O

Installation in Underground Counting Room

- **Expect access by March '05**
  - Delay of 1 year from baseline
- **Sufficient time for installation & some testing but not for complete commissioning with detectors**

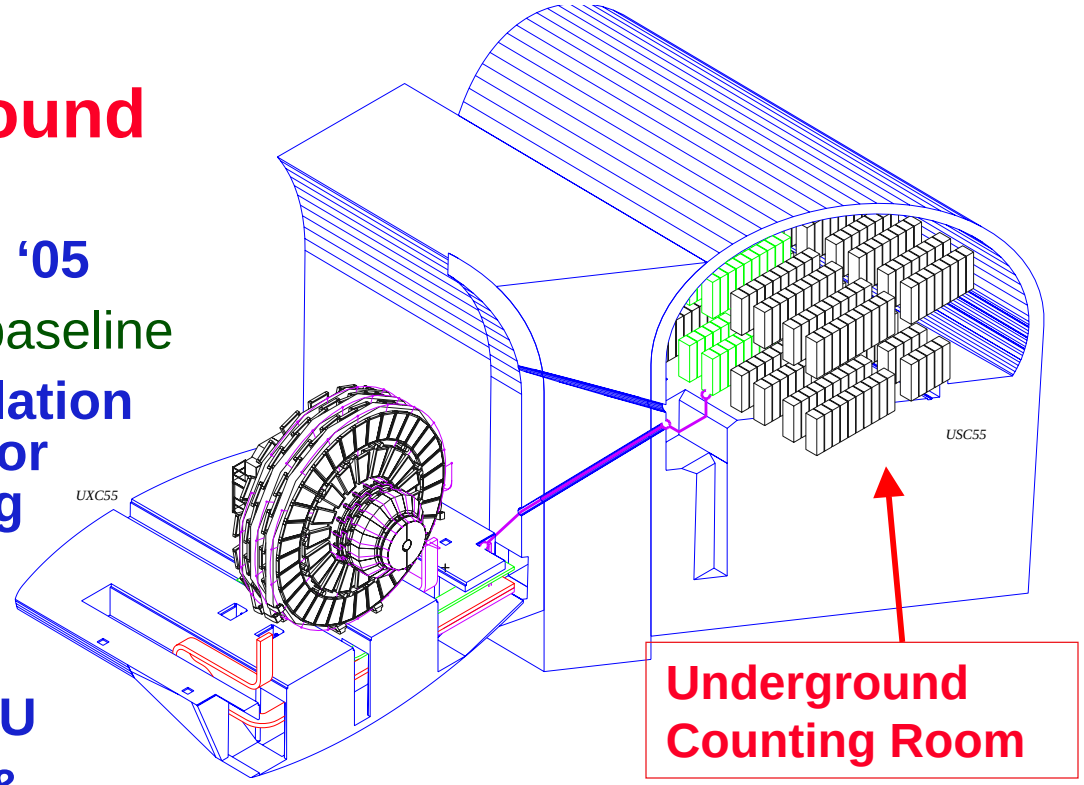

Slice Test (on surface)

- **With both HCAL and EMU**
- **Verify trigger functions & interfaces by testing w/detectors on surface at CERN.**
- **Suggest as substitute for commissioning completion step.**
- **Will check as much on surface before gaining access to underground facilities.**
- **Planned for October '04 - March '05**

Baseline Trigger L2 Task Schedule & Updates

Tasks	start	finish	new
• Produce TDR	8/00	12/00	✔
• Design Final Prototypes	11/00	12/01	✔
• Construct Final Prototypes	6/01	6/02	⇒11/02
• Test/Integrate Final Prototypes	12/01	12/02	⇒ 4/03
• Pre-Production Design & Test	6/02	6/03	⇒11/03
• Production	12/02	6/04	
• Production Test	6/03	11/04	
• Trigger System Tests	5/04	5/05	
• "Slice Test" (NEW) ←	10/04	3/05	←
• Trigger Installation	3/05	9/05	←
• Integration & Test w/DAQ & FE	6/05	12/05	←
• Maintenance & Operations	10/04	-------	←

6 months civil engineering delay of installation date

- With respect to date reported at Lehman '01

US Trigger Estimate-to-Complete

US Trigger Estimate-to-Complete = $4.6M AY

1998 Project Baseline Total Cost = $7.6M AY

2002 Project Total Cost = $8.5M AY

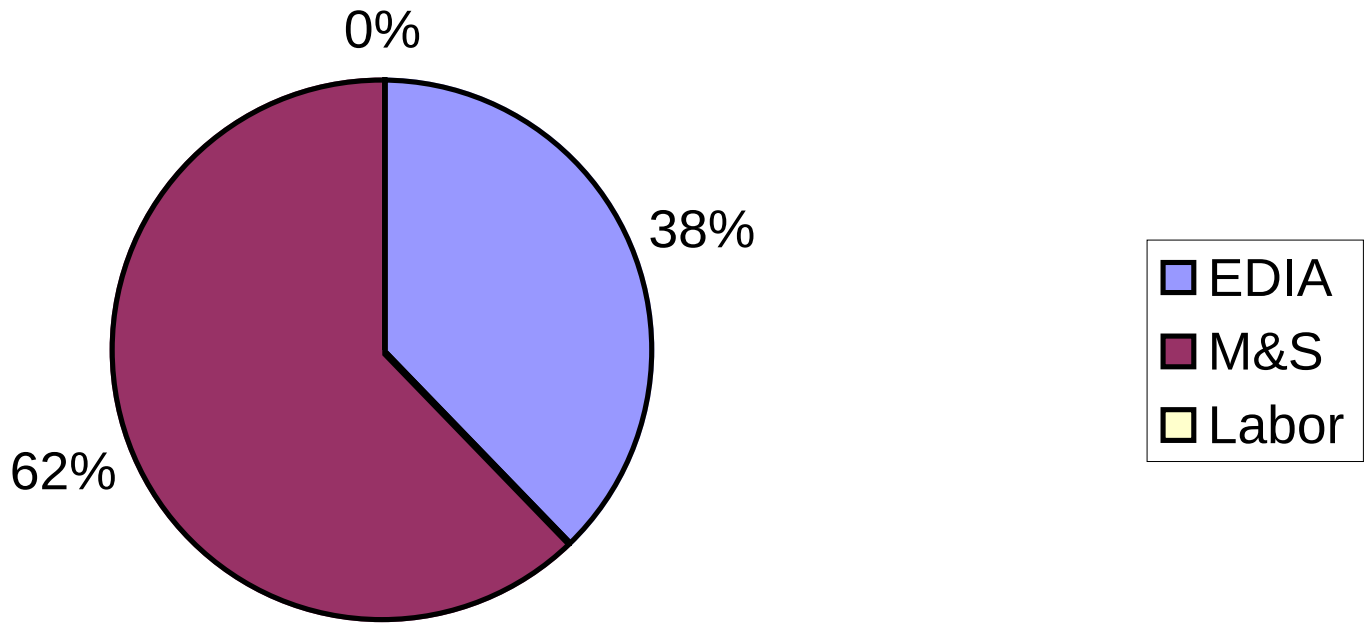

As of May '02 Trigger Project is 46% Complete

Costs up 12% over '98 baseline (50% contingency)

US TRIG Project Resources (FTE's)

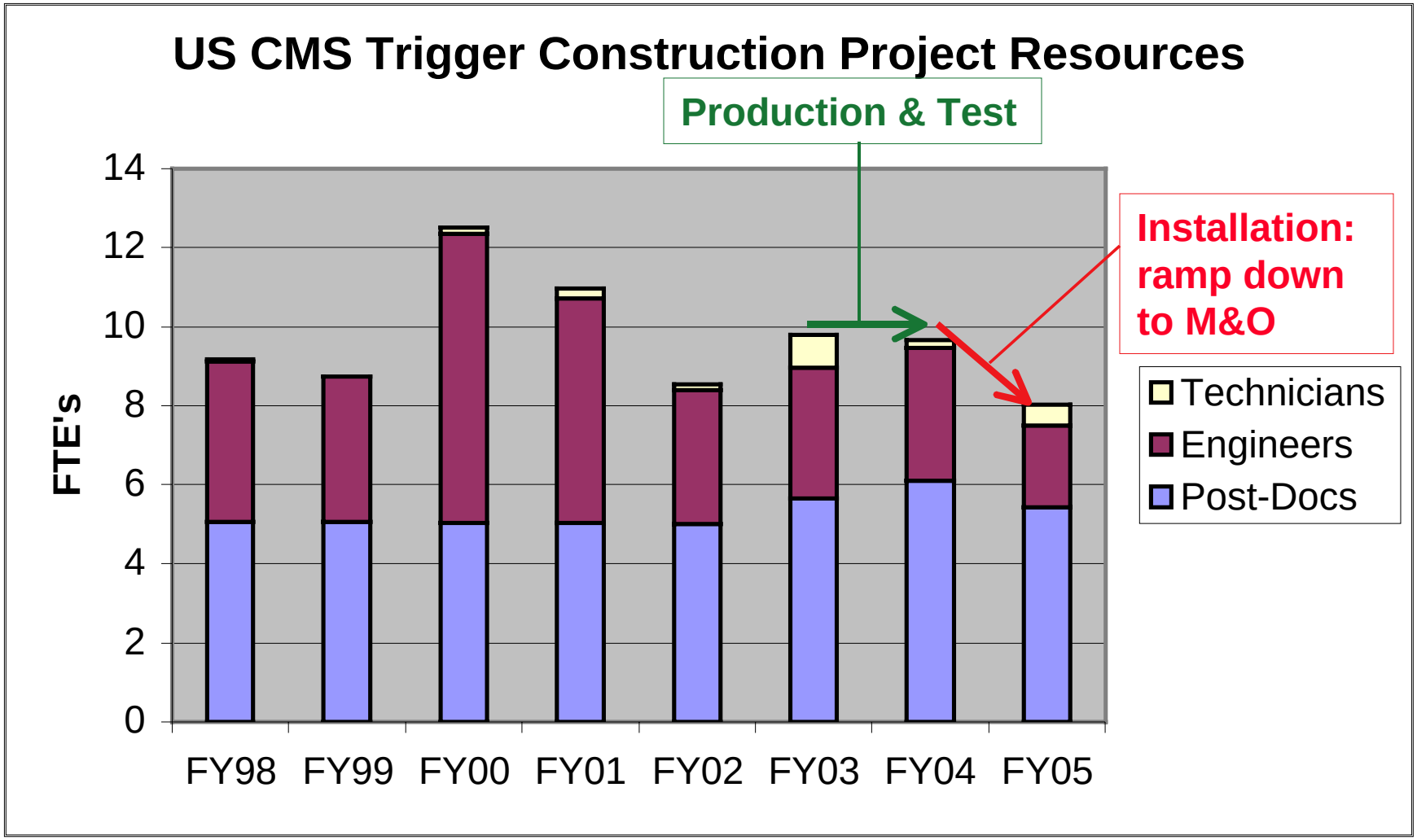

US Trigger M&O Resources

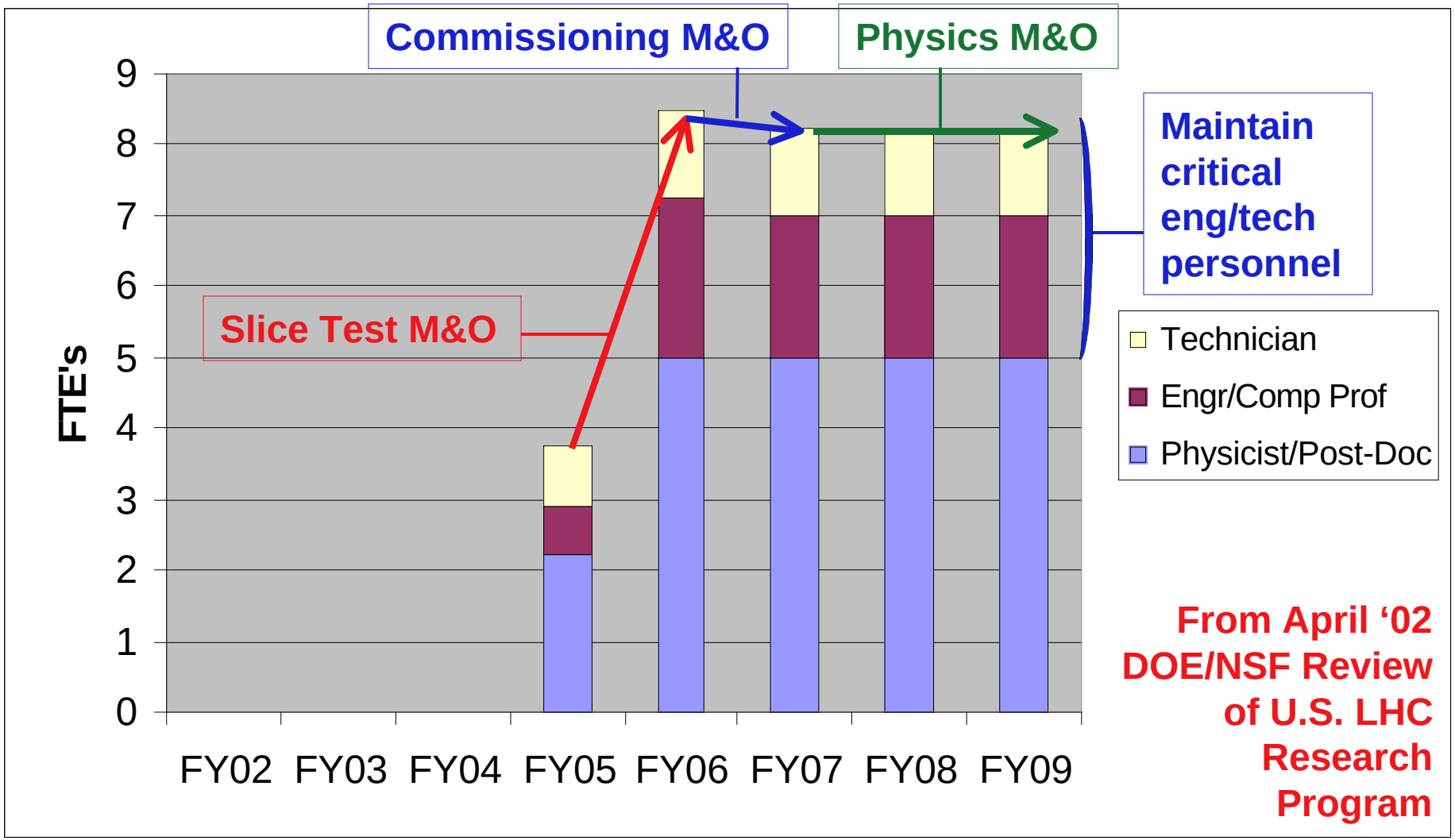

Trigger Commitments

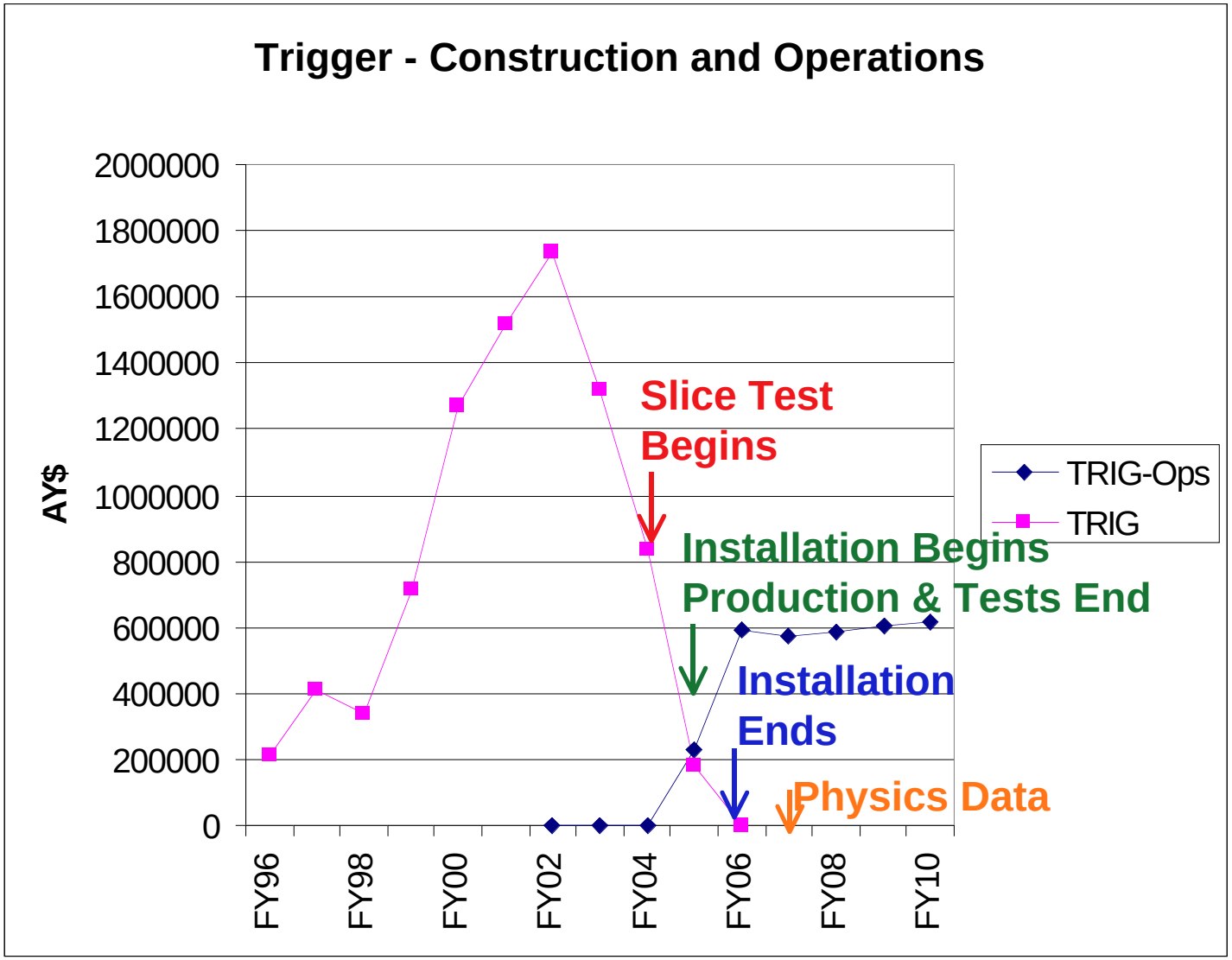

Concerns

Installation Schedule

- **New schedule has reduced installation time**
- **Significant time needed for integration in a synchronous pipelined system.**

Base Program Manpower

- **Major effort on trigger software required**
  - Tasks include board testing, monitoring/controls, diagnostics, configuration downloading and documentation, modeling, physics simulation, etc.
- **Major effort on testing & installation**
  - Planned as activity of base program manpower
- **New Major Effort on "Slice Test**
  - Motivated by installation delay
  - Also needs base program manpower

Conclusions - Trigger

Calorimeter Trigger

- **All second generation prototype boards and ASICs built and under test**
  - Except jet summary card -- ready for manufacture
- **Initial test results look good**
- **Integration tests w/ECAL,HCAL start this Fall**

Muon Trigger

- **All second generation prototype boards and their FPGA logic are designed**
  - Construction is starting
- **Integration tests start w/EMU next Spring**